Omega®

Super Chromega F Dichroic II

Instruction Manual

Important Safety Instructions

When using your photographic equipment, basic safety precautions should always be followed, including the following:

1. Read and understand all instructions before using.
2. Close supervision is necessary when any appliance is used by or near children. Do not leave appliance unattended while in use.
3. Care must be taken as burns can occur from touching hot parts.
4. Do not operate appliance with a damaged cord or if the appliance has been dropped or damaged – until it has been examined by a qualified service person.
5. Position the cord so that it will not be tripped over, pulled, or contact hot surfaces.
6. If an extension cord is necessary, a cord with a current rating at least equal to that of the appliance should be used. Cords rated for less amperage than the appliance may overheat.
7. Always unplug appliance from electrical outlet before cleaning and servicing and when not in use. Never yank cord to pull plug from outlet. Grasp plug and pull to disconnect.
8. Let appliance cool completely before putting away. Loop cord loosely around appliance when storing.
9. To reduce the risk of electric shock, do not immerse this appliance in water or other liquids.
10. To reduce the risk of electric shock, do not disassemble this appliance, but take it to a qualified service person when service or repair work is required. Incorrect reassembly can cause electric shock when the appliance is used subsequently.
11. The use of an accessory attachment not recommended by the manufacturer may cause a risk of fire, electric shock, or injury to persons.
12. Connect this appliance to a grounded outlet.
13. Disconnect this unit from its source of supply before replacing the projection lamp.

These safeguards are prescribed by Underwriters Laboratories to be included in this instruction manual for U.L. listed products.

SAVE THESE INSTRUCTIONS

Introduction

Thank you for selecting our Super Chromega F Dichroic Color Enlarger or Lamphouse. You are most likely familiar with Omega quality, engineering, and design superiority. You may be assured that this enlarger continues these standards of excellence. We urge you to read these instructions thoroughly so that you may quickly familiarize yourself with the correct set up and operating procedures.

And as always, please feel free to contact Omega if you have any questions or problems. Simply drop a line with full details of your problem and the Omega equipment you are using to Consumer Service.

In U.S.A.:
Berkey Marketing Companies
25-20 Brooklyn-Queens Expressway West
Woodside, NY 11377
(718) 721-2929

In Canada:
Berkey Photo (Canada) Ltd.
136 Watline Avenue
Mississauga, Ontario L4Z2E2

Contents

Operating Controls

1. Enlarger Leveling Adjustment
2. Baseboard Guides
3. Baseboard
4. Lens Stage Adjustment
5. Lens Mount
6. Negative Masking Control
7. Extension Focusing Knob
8. Focusing Knob
9. Magnification Control Handle
10. Lamphouse Lifting Lever
11. Carriage Locking Knob
12. Magnification Reference Scale
13. Baseboard Supporting Hooks
14. Filtration Control Knobs
15. Illuminated Filtration "Read out" Scales
16. White Light Focusing Lever
17. Accessory Filter Drawer
18. Negative Carrier

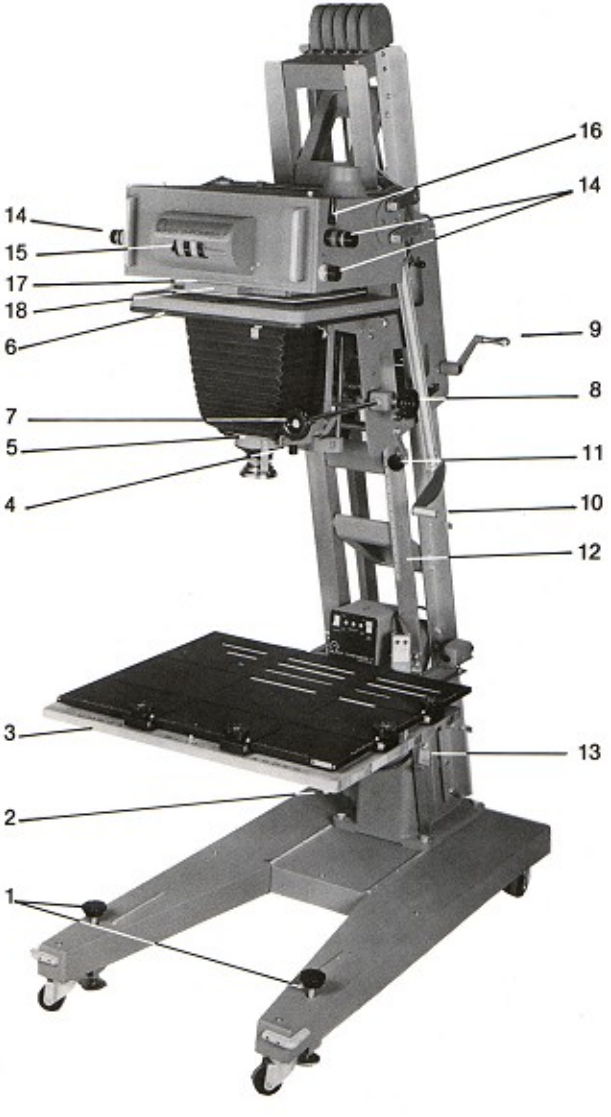

Figure 1. Super Chromega F Dichroic II Color Enlarger

General Information

LAMPHOUSE

The Dichroic Lamphouse has many important features and operating advantages. Many of these features are well known to users of acetate filter Chromega Lamphouses; others, however, are unique to this highly advanced Dichroic color head.

Built-in Hi-range 0-170 Stepless Dichroic Color Filtration

The Lamphouse incorporates a highly accurate variable color filtration system, whereby precise filtration is achieved by means of specially designed transmission dichroics. These second generation filters transmit the intended color component of a white light beam to match the characteristics of color emulsions, and reflect the complementary color. Unlike acetate filter systems, our dichroics are virtually indestructible under constant professional use and will not fade, irrespective of heat or environmental conditions. The highly sophisticated dichroic coatings are applied in multiple layers of microscopic thickness to extremely close tolerances; as a result, Super Chromega Dichroic filters offer the greatest filtration range (from 0-to-170) ever achieved in dichroic filtration systems.

Filtration settings are numerically displayed on large, illuminated "drum" scales. These permit precise filtration control and repeatability with excellent accuracy. Settings are marked in increments of 5CC. The filtration control knobs are equipped with extension chains for convenient adjustment when the enlarger is elevated.

Built-in Infra-red Filtration

This lamphouse is equipped with built-in infra-red filters, mounted in front of filters opposite the entrance "ports" to the mixing chambers. They are designed to reduce the adverse effects of infra-red rays on both color negatives and color printing papers. In addition, they substantially aid in the repeatability and accuracy of the color analyzer and help give it the ability to measure the potential spectral differences between different sets of quartz halogen lamps. As a result, "down time" is reduced to an absolute minimum following lamp change and continuity of production is assured.

Interchangeable Light Intensification Masks

The Super Chromega Dichroic "F" Lamphouse permits use of an accessory set of interchangeable light intensification masks which permit you to maximize light output for negatives smaller than 8" x 10".

These masks fit into the slide-in accessory filter drawer at the bottom of the lamphouse.

Unused light is not wasted, but reflected off the white surface of the mask and redirected by multiple diffused reflections off the sidewalls of the mixing chamber, downward through the enlarger's optical path, thus condensing it upon smaller negatives for greater light intensity and shorter exposure times.

In addition, each mask is specifically designed to provide controlled light distribution in conjunction with built-in diffusion discs of remarkable uniformity with lenses of specific focal length recommended for each negative size. Virtual "zero" fall-off is achieved with all formats from 10" x 10" to 2¼" x 2¾" at moderate magnifications. The lamphouse is supplied with a tapered 10" x 10" opal disc for 8" x 10" and 9" x 9" negatives. A set of mask assemblies for 5" x 7", 4" x 5" and 2¼" x 3¼" are available separately (for ordering information, see page 14).

Quartz Halogen Lamp

The lamphouse is equipped with four 250 w. quartz halogen lamps; incorporating built-in dichroic reflectors. This insures uniform illumination over the full 10" x 10" opening, and permits far shorter exposure times than were possible with previous illumination systems. (A system of indicator lamps on the power supply signals lamp failure.)

Moreover, the lamps will not blacken with age, insuring that light output and color temperature remain constant throughout the lamp's operating life (nominally 50 hours).

White Light Focusing

A convenient control lever permits full power "white light" for focusing and composing. When operated, this retracts the entire filtration assembly outside the light path without disturbing filtration settings. After focusing, a flick of the lever returns the filters to their pre-selected settings.

Cooling

Efficient cooling is provided by a heavy-duty wall-mounted fan assembly. This connects to the lamphouse by means of a flexible coupling hose of great strength and durability, and assures maximum lamp life, as well as cooling the dichroics and preventing the lamphouse from overheating.

ENLARGER

Cantilevered, 98" high quadruple aluminum girders on a welded steel base provide stability without vibration at any position of the enlarger head. The base features heavy-duty casters for easy movement and nylon, (ball-joint leveling) locking pads.

A large handcrank raises or lowers the counterbalanced lamphouse assembly quickly and easily. Optionally, the same function may be performed by a pushbutton-operated remote control accessory, the Omega Powerlift (Catalog No. 412-004).

Lever action raises or lowers the entire lamphouse, providing for dust control between the lamphouse and the negative carrier. This also simplifies the insertion or removal of the negative carrier, and provides for positive pressure alignment of the film plane for film flatness.

The main film stage accepts a simple book-type universal glass negative carrier for all film sizes up to 10"x10". This unit may be rotated 180°. Four-way individually adjustable masks permit masking of the negative down to 4"x5" size with pre-calibrated settings on the built-in adjustable masking control.

The micrometer friction-drive focusing mechanism can be operated from the side or the front of the enlarger or, when the head is in the high elevation, by means of a telescoping focusing arm.

Extra-long bellows are adjustable for extreme reductions.

A warp-proof, hardwood baseboard measures 24" x 32" and is usable in three convenient positions, from 10" (for maximum magnification) to 30" (normal working height) above floor level.

Unpacking and Assembly

Unpacking

Take great care in unpacking your enlarger from the shipping carton and check all items against the packing check-off list. Do not discard packaging materials until everything is accounted for. You may wish to save the cartons and inserts for possible future use. **PLEASE NOTE:** The envelope stapled to the outside of the carton (marked, "Packaging Instructions") contains illustrated packing diagrams for both the enlarger carton and Lamphouse carton with complete instructions for unpacking the enlarger.

The enlarger column carriage assembly and easel assembly are carefully packed as a unit in a corrugated carton with a wooden base. The base board assembly is packaged in a separate carton secured to the side of the carton. The Lamphouse with power supply, wall mounted blower assembly and wooden dowel are packaged together.

Girder and Carriage Assembly

CAUTION: The enlarger carriage is spring counterbalanced to compensate for the weight of both the carriage assembly and lamphouse. Before removing the wooden blocks inserted between carriage assembly and girder spacer castings, unpack and mount the Dichroic Lamphouse in place and be sure that the carriage locking knob is tight by turning it clockwise.

1. Roll the enlarger to the location where the enlarger will be assembled and used in the darkroom.
2. Remove all hold down straps used to fasten the lifting levers, bellows assembly and masking blades for shipping.

Mounting of Dichroic Lamphouse

1. Carefully unpack and position negative carrier into opening on negative masking control of enlarger.
2. Carefully unpack Super Chromega Dichroic F Lamphouse and power supply.
3. Carefully center lamphouse over opening in negative carrier.
4. Swing lifting lever arms forward so that slots in all four arms engage knurled screws fully, thus attaching lamphouse to lifting levers. (see figure 2) Screw down knurled screws fully so that shoulders on screws fit into slots of lifting levers.
5. Remove the shipping blocks between girder and carriage assembly.

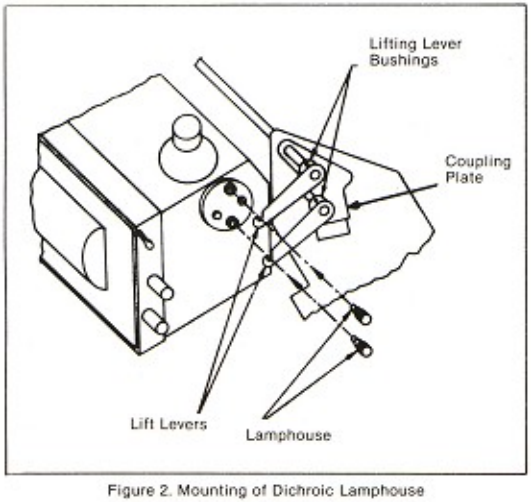

Figure 2. Mounting of Dichroic Lamphouse

Lamphouse Alignment

The lifting levers are preset at the factory to an approximate position of alignment to the lamphouse to assure evenness of alignment between lamphouse and negative stage. However, it may be necessary to realign the lamphouse and adjust the levers accordingly. Please use the following set of alignment instructions to correct any misalignment of lamphouse to film stage.

Because the center of gravity of the lamphouse is located in front of the lifting levers, it is necessary to "Bias" the lamphouse to insure that front and back sections rise simultaneously, when the lamphouse is raised and lowered. In practice, this result is achieved quite simply by means of the wooden "Bias" dowel supplied (see figure 3).

1. Lift lamphouse (with lifting levers) and place wooden dowel (supplied) at front of negative carrier. Lower lamphouse. Loosen the two hex screws in the circular plates at the sides of the lamphouse. (At this point, if front-to-back alignment of the lamphouse is not correct, move the lamphouse towards you — or away from you — gently, until it is centered precisely.)
2. Tighten hex screws on lamphouse fully, and remove wooden dowel. Make a final check that all other screws, bushings, and nuts are fully tightened.

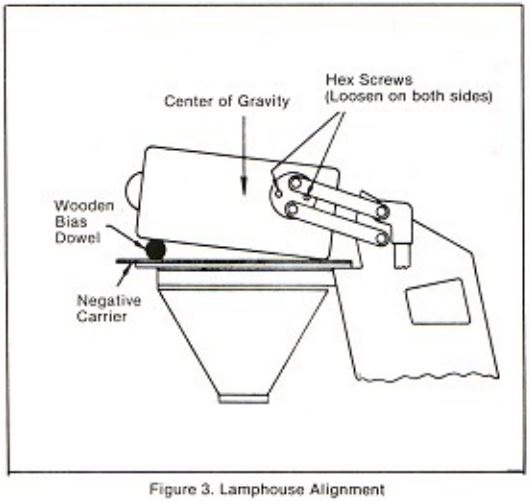

Figure 3. Lamphouse Alignment

Mounting Baseboard

The baseboard for the Dichroic F (10" x 10") has been factory aligned for use at any of three (3) different heights.

Lowest Position: Directly on the base of the enlarger.

Intermediate Position: Resting on the lower set of baseboard supporting hooks.

Highest Position: Resting on the highest set of baseboard supporting hooks.

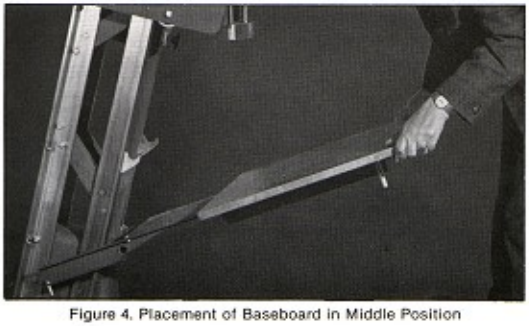

Figure 4. Placement of Baseboard in Middle Position

To install the baseboard assembly onto the enlarger, first raise the Omega F Lamphouse to the highest position (in order to avoid getting in the operators way) by turning magnification control handle on the right side of the enlarger. Place the baseboard on the base of the Dichroic F Enlarger, making sure that the guides on the bottom of the baseboard line up with the tracks on the base of the enlarger. Slide the baseboard assembly to the rear of the enlarger. The baseboard is now positioned at its lowest setting.

To raise the baseboard to either of the higher settings, proceed as follows: Grasp the baseboard with both hands and lift the front until the rollers on the channels of the baseboard assembly engage the rear of the front girder. At this point, start to pull the baseboard assembly towards you. This will allow the baseboard to be raised to either of two (2) upper positions. Continue until cross bar on rear of baseboard assembly lines up with the baseboard supporting hooks on the girder assembly. At this point, lift the baseboard towards and over the supporting hooks until the cross bar engages the supporting hooks and the rear of the baseboard channel goes under the stop plates on the rear girders (see figure 4).

MOUNTING AND CONNECTING EXHAUST BLOWER ASSEMBLY

Cooling System

Consists of, wall mounted fan housing (containing fan motor and fan), connecting flexible hose and hose clamps.

Mounting Instructions

1. Mount fan housing to a wall closest to the enlarger. Slots are provided in the rear of the housing to suspend housing onto wall hooks.
2. Attach ends of flexible hose to recepticles on both wall mounted blower housing and intake "Port" on top of lamphouse (see figure 5) and secure with clamps supplied.
3. Plug in fan cord into proper recepticle of power supply marked "To Fan".

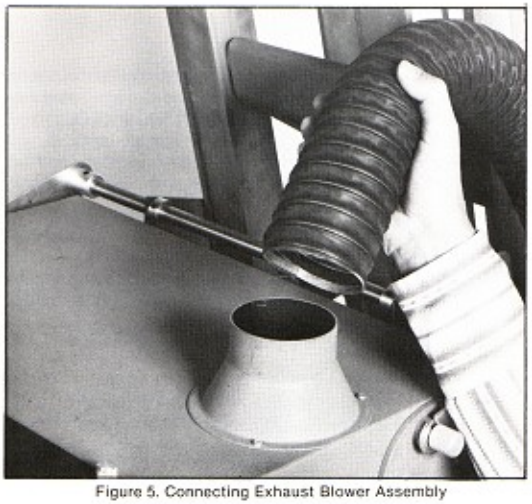

Figure 5. Connecting Exhaust Blower Assembly

Electrical Connections

Power Supply

The power supply provides low voltage to the quartz-halogen lamps, and full line voltage to the cooling fan and filtration – dial lights. It has been factory adjusted for 117 volt AC, 50/60 Hz. operation in accordance with normal American electrical requirements. Adding a 1KW stabilizer to the power supply (see figure 8) permits operation at this setting from power lines with a nominal rating of 95 volts to 130 volts.

On/Off Switches (see figure 6)

The left switch at the front of the power supply unit controls electrical current to the enlarger lamphouse and fan, as well as accessories connected to the power supply. The right switch controls the panel lights which illuminate the read out dials of the filtration scales.

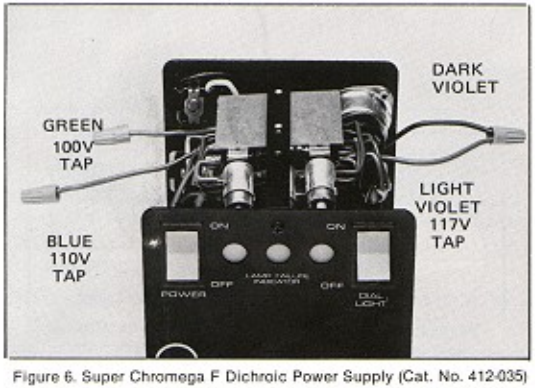

Figure 6. Super Chromega F Dichroic Power Supply (Cat. No. 412-035)

Warning Lights (see figure 7)

In the event any of the quartz-halogen lamps fail to operate, one or more of the three white "windows" on the front panel of the power supply (marked "Lamp failure indicator") will light up. Always check these windows before actually printing.

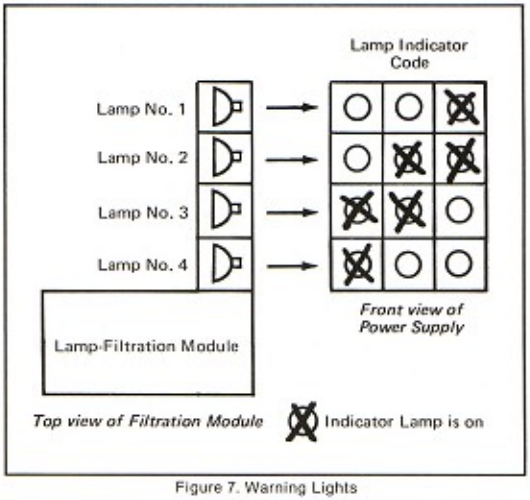

Figure 7. Warning Lights

Use with Foreign Power Sources (see Figure 6)

For operating from 110v or 100v lines, a simple adjustment must be made. To adjust voltage, first **MAKE SURE THE POWER SUPPLY IS DISCONNECTED FROM THE WALL OUTLET.** Remove the power supply wrap-around cover by unscrewing the two Phillips head screws on each side and the single screw on top. Disconnect the LIGHT VIOLET lead wire from the DARK VIOLET lead wire. The LIGHT VIOLET lead wire terminates off the rear of the lamphouse socket TERMINAL 12. Transfer this lead LIGHT VIOLET to the Blue 110v or the Green 100v, whichever is appropriate. Replace caps and cover completing the adjustment.

Lamphouse Connection

The lamphouse cable terminates in an eight bladed polarized plug which is simply inserted into a matching recepticle at the *lower left* side of the rear of the power supply (see figure 8).

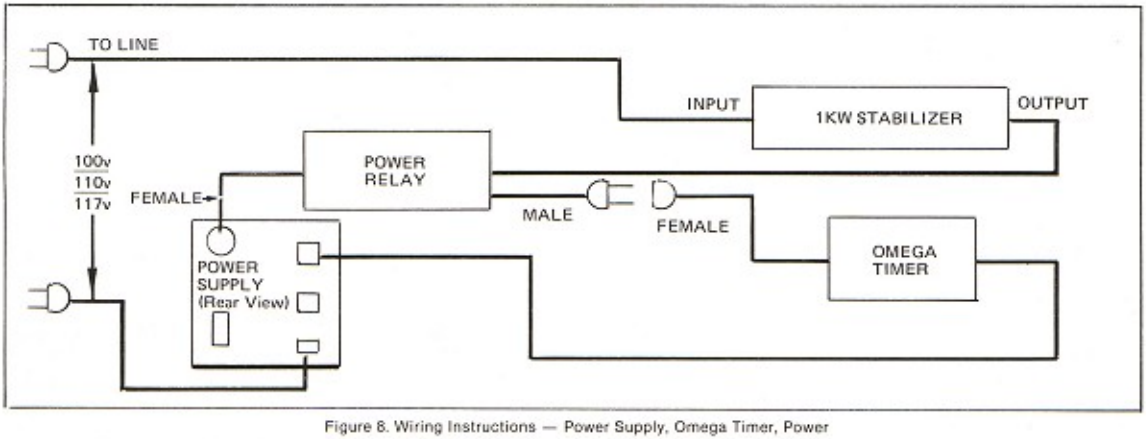

Figure 8. Wiring Instructions — Power Supply, Omega Timer, Power Relay and 1KW Stabilizer

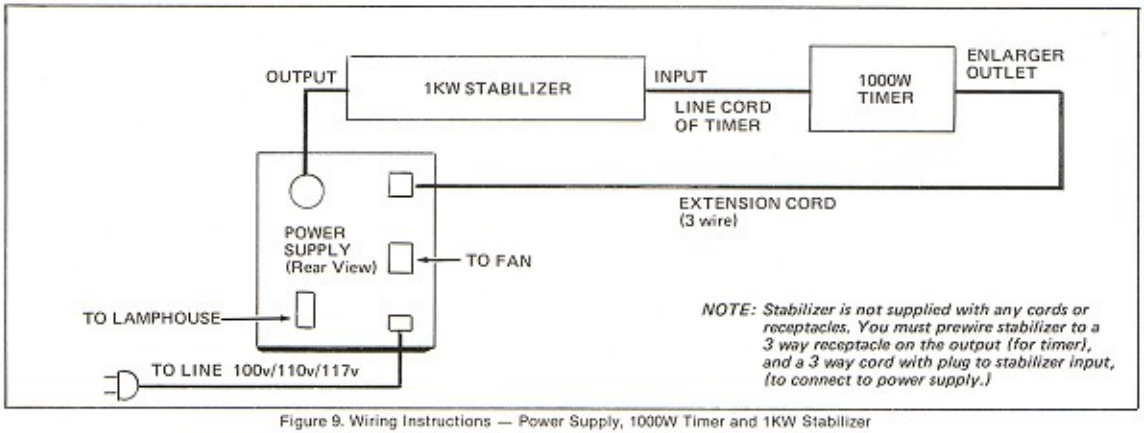

Figure 9. Wiring Instructions — Power Supply, 1000W Timer and 1KW Stabilizer

Connecting Timer and Power Relay (see figure 8)

Any accurate enlarging timer can be used with the Super Chromega F Enlarger. However, an electronic timer is recommended. Used in connection with the Omega Power Relay (Catalog Number 412-022), this combination provides an ideal timing system for the most demanding requirements. **NOTE:** The power relay **must be used** with timers rated below 1000 watts (minimum 100 watts).

The timer and relay connect directly to power supply as shown in figure 8.

If, for some reason, it is desired to use another make or model timer, rated at 1000 watts, the Omega Power Relay is not used. A 6 ft. wire extension cord is supplied with the enlarger which is used to connect timer and voltage stabilizer (recommended) to the power supply as shown in figure 9.

Connecting Exhaust Blower Attachment to Power Supply

The exhaust blower cable terminates in a four connector polarized plug which is simply inserted into the female connector on the rear of the power supply marked "To Fan" (see figure 10). Two safety features are built into the F Dichroic lamphouse and power supply. Both prevent operation of the lamps should the **fan become disconnected from the power supply** or **the lamphouse overheat caused by an inoperative fan motor.**

A thermostat control located in the lamphouse will automatically turn off the lamps if the inside temperature of the lamphouse exceeds 130°F. After the lamphouse cools down to approximately 105°F, the lamps will automatically come on.

We suggest that you read the section concerning routine maintenance before you resume normal operation.

A safety interlock located at the power supply prevents operation of the lamps if the blower assembly is turned off or if the fan cord becomes disconnected.

These features will assure constant cooling and protection of the lamphouse at all times.

After all connections are made, plug in power supply cord to wall outlet.

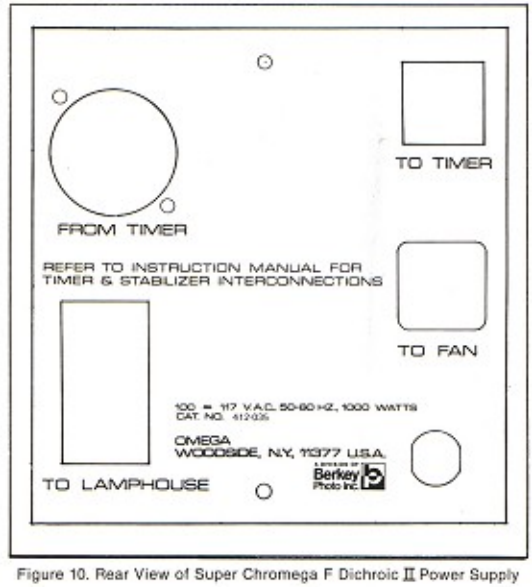

Figure 10. Rear View of Super Chromega F Dichroic II Power Supply

Connecting Voltage Stabilizer

The use of the voltage stabilizer is strongly recommended as a "must" for professional color printing. We recommend a one kilowatt 60 Hz. Ferro Resonant Type Stabilizer. (One source for such stabilizers is Sola Electric, 1717 Busse Road, Elk Grove Village, Illinois 60007.)

NOTE: For operation on 50 Hz. current, a 50 Hz. stabilizer is required. Attach stabilizer to power supply as shown in figures 8 and 9.

Operating Parts & Controls

Filtration Control Knobs (see figure 11)

The desired filtration is set by merely turning the knurled control knobs extending from the right and left sides of the lamphouse until the read out scales show the intended density values. For added convenience, these control knobs may be operated with extension chains (supplied) which are simply looped around the knob housings.

Figure 11 Filtration Control Knobs and White Light Focusing Control Lever

White Light Focusing Control Lever (see figure 11)

For critically accurate focusing and composing (or black and white printing where maximum printing speed is desired) raise the *white light focusing* control lever at the upper right side of the lamphouse. When activated, this *retracts* all filters from the light path. When the lever is in the *down* position (towards operator) previously dialed filtration are restored to their exact settings. Make sure that this lever is *fully* in the "down" position, to insure that the filtration assembly has been completely returned within the light path.

Lamp Replacement (see figures 12 and 13)

Loosen the four knurled screws which secure the lamp filtration module within the lamphouse. (Two of the knurled screws are on top of the lamphouse, and two on the sides.) Grasp the two chrome handles at the front of the lamphouse, and carefully pull out the lamp/filtration module.

The lamps are two-pin plug-in types, inserted in ceramic retaining sockets. To remove lamps, release the socket by pressing back on the spring clamp next to the socket; then, pull out the socket gently, and slide out the lamp.

Prior to installation, it is recommended that you scrape the pins of the lamp to remove any oxidation which may have formed during storage. This ensures proper contact with the socket.

NOTE: Do not touch the inside reflector or bulb during handling operation as the oil from your fingers will damage bulb.

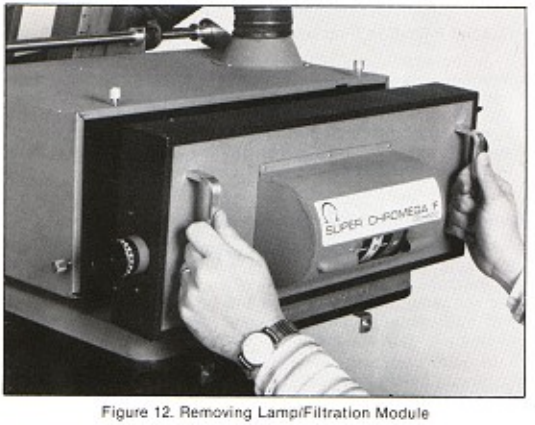

Figure 12. Removing Lamp/Filtration Module

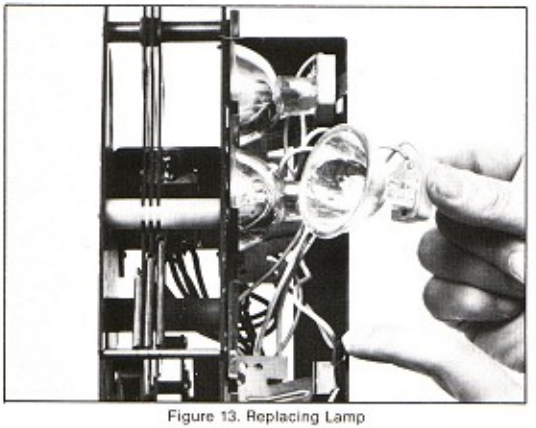

Figure 13. Replacing Lamp

When installing lamps, make sure the ceramic socket is firmly held by the spring clamp, and that no wires are pressed against the clamp. *For optimum consistency, it is recommended that, whenever possible, all four lamps be replaced simultaneously.* Replacement lamps are available from your authorized Omega dealer under Catalog Number 471-029.

Infra-Red and Ultra-Violet Filtration

Because infrared rays can adversely affect color negatives, Ektachrome Duplicating Film 6120, and color printing papers, infrared filters are built into the lamphouse. They are mounted at the four entrance ports of the mixing chamber in front of each Halogen Lamp.

Some of the Ultra-violet light is also absorbed by the removable 11¾" x 11¾" opal diffusion plate set into the accessory filter draw at the bottom of the lamphouse. If full U. V. absorption is required, we recommend insertion of an additional U. V. filter (such as the Kodak Type CP-2B acetate) into the filter drawer along with the plate. Such filters are readily available in 12" x 12" size which can be trimmed to fit the accessory filter drawer.

Special Filtration Requirements

In the event you wish to use acetate or gelatin supplementary filters for special effects, standard 12"x12" filters can be trimmed and used in the accessory filter drawer at the bottom of the lamphouse, (atop the light intensifica tion mask or diffusion plate if one is used). Since such filters will thus be positioned above the negative, no deterioration in image sharpness will result from their use.

Interchangeable Light Intensification Masks and Drawer

Maximum light concentration for each format (8"x10", 5"x7", 4"x5" and 2¼"x2¾") is achieved with instantly interchangeable light intensification masks. These slide into the accessory filter drawer at the bottom of the lamphouse and intensify light output over a specific format in use to enable the shortest possible printing times.

In addition, each of these masks has calibrated tapered duffusion plates designed to give minimal "Fall-off" (at moderate magnifications) in light distribution when used with specific focal length lenses. **We recommend that you use the following combination of light intensification masks and lenses.** (see figure 14.)

Lens	Negative Size	Light Intensification Mask
360	9"x9" Aerial or Larger	11¾"x11¾" opal diffusion disc
300	8"x10"	11¾"x11¾"opal diffusion disc
210	5"x7", 5"x5" Aerial	5½"x7½" Mask w/opal diffusion disc
150	4"x5"	5½"x5½" Mask w/opal diffusion disc and a 1/16" opal plate
105	2¼"x2¾"	3½"x3½" Mask w/opal diffusion disc

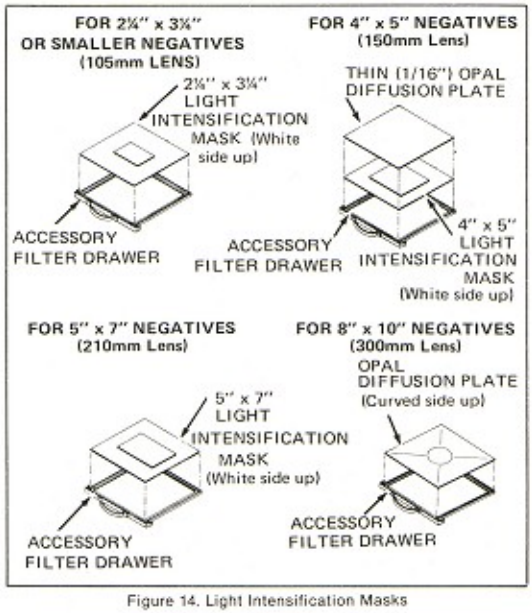

Figure 14. Light Intensification Masks

Focusing of Dichroic (see figure 15)

The well-known Omega friction drive focusing movement is incorporated in this design. Focusing is done by turning either of two large focusing knobs located on the right side of the enlarger. The knob located towards the front is on an extension shaft that can be used by simply pulling on the knob. This is especially useful at large magnifications as this enables the operator to view the image closely while focusing the enlarger from a comfortable position.

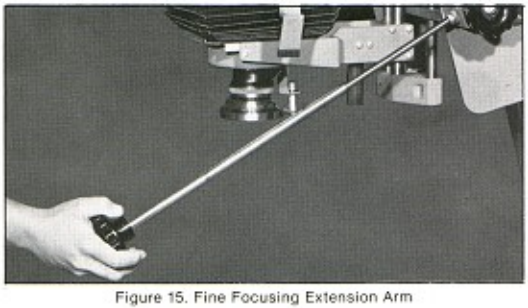

Figure 15. Fine Focusing Extension Arm

Magnification Control Handle and Remote Control (see figure 16)

The carriage assembly is perfectly counterbalanced and is raised and lowered by a hand crank. For remote control an accessory Omega power lift attachment is available (Catalog No. 412-004).

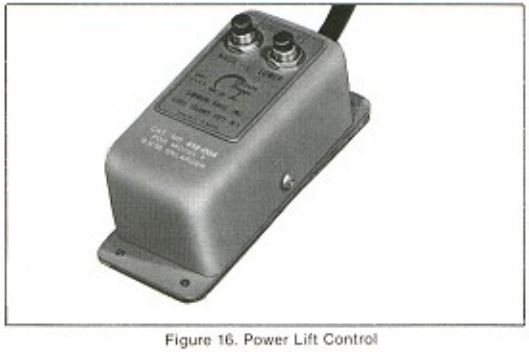

Figure 16. Power Lift Control

Adjustable Leveling Pads (see figure 17)

For stability of the enlarger assembly at all elevations, a cantilevered girder, consisting of four (4) heavy duty aluminum members is mounted on a solid welded steel base with heavy duty casters, ball joints and leveling pads.

Figure 17. Adjustable Leveling Pads

For best results, the Omega F enlarger should be set on a level floor which will not vibrate. However, in case it is necessary to place the enlarger on an area of the floor which is not level, there are two (2) adjustable leveling pads provided on the base of the enlarger to compensate for unevenness.

Lens Stage Adjustment (see figure 18)

For enlarging, lenses from 105mm to 300mm may be used and the lens stage may be placed at either of two positions depending on the lens used and the magnification desired. To change the lens stage position, grasp the (red) handle (found behind the lens on the bottom of the lens stage) and move up (for 105mm-190mm lens) or down to adjust the extra long bellows for the 210mm and 300mm lens or reduced magnifications.

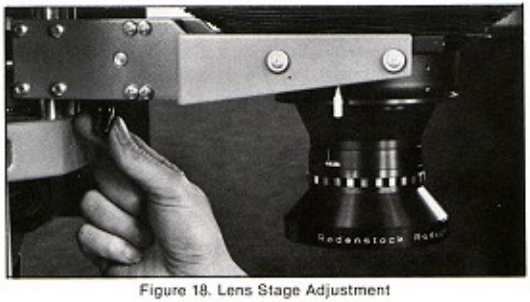

Figure 18. Lens Stage Adjustment

Masking Attachment (see figure 19)

The built-in adjustable masking control has scales for negatives from 4" x 5" up to 10" x 10" to eliminate stray white light when projecting sections of a negative. For negatives smaller than 4" x 5" insert black paper masks in place over glass on bottom half of carrier.

Figure 19. Adjusting the Negative Masking Control

Projection Reference Scale (see figure 20)

On the right side of the enlarger girder is a reference scale which the operator can use to refer to the height of the carriage.

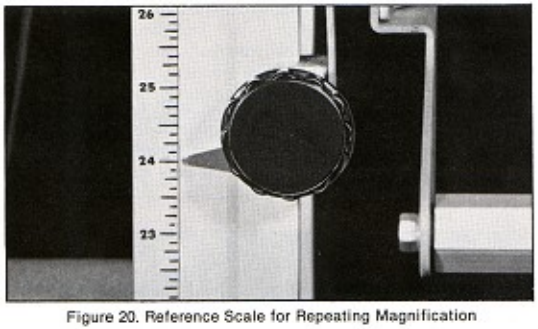

Figure 20. Reference Scale for Repeating Magnification

How to Insert the Negative

First, the film must be inserted in the glass negative carrier. (Follow steps given on page 12 under "Omega F Negative Carrier".) Lift the lamphouse by means of the lifting lever (found on the right side of the enlarger) and insert the negative carrier.

After the carrier is in place, lower the Dichroic F lamphouse in the same manner.

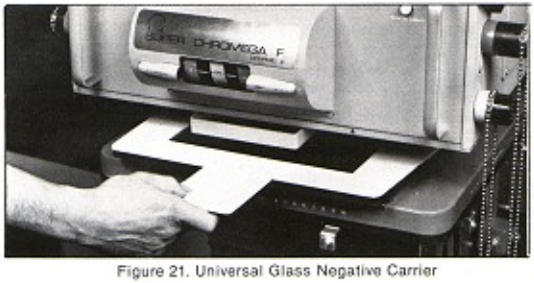

Figure 21. Universal Glass Negative Carrier

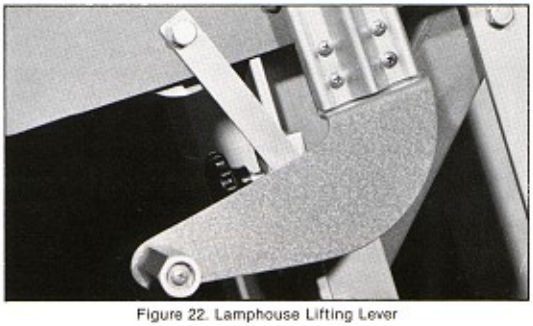

Figure 22. Lamphouse Lifting Lever

Negative Carriers

A special glass negative carrier has been designed for use with the Super Chromega F Dichroic Enlarger which effectively prevents light spillage even from the corners of the 10" x 10" lamphouse. It is a universal 10" x 10" glass, hinged book-type negative carrier which can rotate past 180° on the film stage of the enlarger. The carrier will accept up to 10" x 10" negatives, or 10" x 10" section of larger film sizes.

The glass, of course, must be kept perfectly free from dust and finger prints.

1. Open carrier, wipe glass surfaces carefully with photographic lens tissue sold in optical and camera stores.
2. Immediately before inserting a negative, dust both glasses with a camel's hair or static-eliminating brush. Do likewise with the negative, holding it at the edges at one corner.

Lens Mounting Instructions

Grasp the lens mount carefully in both hands with the slotted opening on the lens mount plate facing the rear of the lens stage. Insert the lens mount between lens stage guides and push the lens mount all the way in until it stops.

Figure 23. Inserting Lens Mount with Lens

Lens and Lens Mounts

1. The lens must be of the proper focal length for the size negative to be enlarged (see chart on page 13).
2. It must be used in the proper lens mount (see chart on page 13).
3. Any lens will enlarge negatives smaller than the largest possible size it was designed to cover. But the largest magnification ratio obtainable under these circumstances will be correspondingly smaller (see chart on page 13).
4. The shortest focal length yields the largest magnifications and is usually preferred. The longer focal length lenses listed have noticeable advantages only for exceptionally critical color work. (see chart on page 13).

NOTE: Lenses with asterisk (*) are recommended for use with formats indicated. These lenses combine optimum magnification capability with maximum eveness of illumination for formats designated.

Lens, Lens Mounts, Lens Discs and Magnification Ratios

Maximum Format	Lens Cat. No.	Lens Mount Cat. No.	Lens Disc Cat. No.	Approximate *Minimum Magnification (Table in top Position)	Approximate Maximum Magnification (Table in Bottom Position)
2¼"x2¾"	100mm f5.6 Componon-S (Leica Thread)	421-171	RECESSED CUP SUPPLIED WITH MOUNT	0.21x	15.5x
	105mm f5.6 Rodenstock Rodagon *452-301	421-171		0.21x	15.5x
4"x5"	135mm f5.6 Rodenstock Rodagon 452-303	421-188	421-001	0.29x	11.2x
	135mm f5.6 Componon-S (42mm Thread)	421-188	421-022	0.29x	11.2x
	150mm f4.5 Rodenstock Omegaron *452-102	421-188	421-008	0.33x	10.2x
	150mm f5.6 Rodenstock Rodagon *452-305	421-188	421-054	0.33x	10.2x
	150mm f5.6 Componon-S (42mm Thread)	421-188	421-022	0.33x	10.2x
5"x7"	180mm f56 Rodenstock Rodagon 452-307	421-188	421-054	0.36x	8.9x
	180mm f5.6 Componon-S	421-188	421-023	0.36x	8.9x
	210mm f5.6 Rodenstock Rodagon *452-309	421-188	421-055	0.45x	6.7x
	210mm f5.6 Componon-S	421-188	421-024	0.45x	6.7x
8"x10"	240mm f5.6 Rodenstock Rodagon 452-310	421-190	No Disc	0.60x	4.8x
	240mm f5.6 Componon-S (56mm Thread)	421-188**	No Disc	0.60x	4.8x
	300mm f5.6 Rodenstock Rodagon *452-311	421-190	No Disc	0.8x	4x
	300mm f5.6 Componon-S	421-189	No Disc	0.8x	4x
9"x9" Aerial	360mm f5.6 Rodenstock Rodagon 452-312	421-190	No Disc	1.0x	3.2x

*These lenses are recommended for maximum light distribution results in combination with the correct light intensification masks for the negative size to be used.

**Requires your local mechanic to modify opening.

Black and White Printing

Variable Contrast Papers

Variable contrast papers may be used either with filters recommended by the manufacturer of these papers (in 10" x 10" acetate sheets placed into the filter drawer in the lamphouse) or with the Dichroic filters that are part of the Super Chromega lamphouse.

The following is an approximate reference of filter settings for use with Polycontrast Papers.

POLYCONTRAST FILTER	EQUIVALENT IN DICHROIC LAMPHOUSE
No. 1	35M – 24Y
No. 1½	42M – 20Y
No. 2	50M – 16Y
No. 2½	100M – 8Y
No. 3	150M – 0Y

Routine Maintenance

Maintenance

In all probability, your Super Chromega Dichroic F enlarger will require little or no service or maintenance. In the event that the focusing assembly develops any play or backlash after intensive use, it may be tightened by means of the special Allen wrenches supplied with your enlarger. (The No. 10 wrench is used to tighten the bushing which holds the focusing knob on the extension shaft; the No. 8 wrench for tightening the bushing on the shaft itself, and the 1/8" wrench for tightening lifting levers to connecting shafts.

The fan motor built into the exhaust blower housing must be lubricated every six months. This is important since the motor could stop functioning if not properly lubricated.

To lubricate the motor, remove the front panel of the blower housing (secured by 12 machine screws) and apply 4 drops of an S.A.E. 20 grade oil or equivalent to each lubrication port (Figure 24).When lubricating, make sure that the lubrication port that is to be oiled is in the top upright position. This will allow the oil to flow down to the armature shaft. After oiling, wipe the motor with a clean cloth to remove any excess oil. Remove all dust or dirt from the fan and inside the blower housing to assure smooth and clean performance of the blower. **NOTE:** Should the fan motor stop working, the enlarger lamps will continue to operate until the thermostat turns them off. At this point it is suggested that you check the connections of the hose at the blower and at the lamphouse to see that they are securely fastened or check the motor itself.

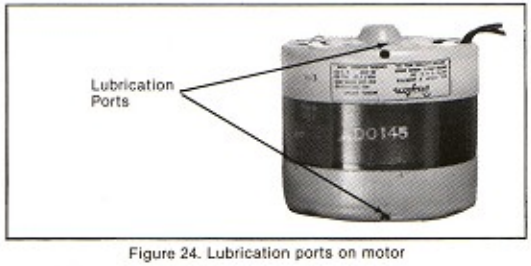

Figure 24. Lubrication ports on motor

Check the exhaust system each day before turning on the enlarger lamps. There should be a constant flow of air through the lamphouse.

Any additional service or adjustment should be performed only after contacting the Omega Service Department.

ENLARGER COMPONENTS

Cat. No.	Description
406-010	**Chromega F Dichroic II Chassis** with 24"x32" baseboard.
406-815	**Super Chromega F Dichroic II Lamphouse** Consists of: Lamphouse with wall mounted blower assembly, 10"x10" Light Intensifier Mask, Lamps and Power Supply.

ACCESSORIES

412-022	**Omega Power Relay** for any timer. Increases load capacity to 1000 watts. Has tinned leads for direct connection to stabilizer terminals or power line juction box.
471-029	Super Chromega Dichroic quartz-halogen lamp, 250 watt, 22.5 volt with integral dichroic reflector. (4 required)
471-031	Lamp indicators for power supply.
471-004	**Omega Power Lift** provides remote-controlled elevation of Super Chromega F Dichroic II Enlarger. Operates on 110V AC, 50-60 Hz. current.
429-163	**Light Intensifier Mask Set.** Set of three light intensification masks for 5"x7", 4"x5" and 2¼"x2¾" formats.
423-715	**10"x10" Universal Glass Carrier**
473-715	**10"x10" Anti-Newton Glass.** Top only for Universal Glass Carrier Cat. No. 423-715

Contact your nearest Omega dealer for information about Omega Timers, Color Analyzers and other darkroom accessories to compliment your new enlarger.

Technical Specifications

SUPER CHROMEGA F DICHROIC II LAMPHOUSE

Dimensions . . . . . 19"x26"x9¼"
Weight . . . . . 48 lbs.
Input Voltage . . . . . 100, or 110, or 117 VAC
Lamp Capacity . . (4) 22.5V 250W Quartz Halogen Lamps
Lamp Voltage . . . . . 22.5 VAC
Filtration Range 0-170
Cooling . . . . . Wall mounted blower with 6' flexible connecting hose
Shipping Dimensions . . . . . 40"x22"x15"
Shipping Weight . . . . . 75 lbs.

SUPER CHROMEGA F DICHROIC II CHASSIS

Maximum Height fully extended with lamphouse . . 100"
Minimum Height, girder only . . . . . 96"
Floor Space Required . . . . . 55"x32"
Baseboard Dimensions . . . . . 24"x32"
Maximum Bellows Extension . . . . . 22"
Shipping Dimensions . . . . . 102"x34"x60"
Shipping Weight Chassis only . . . . . 500 lbs.

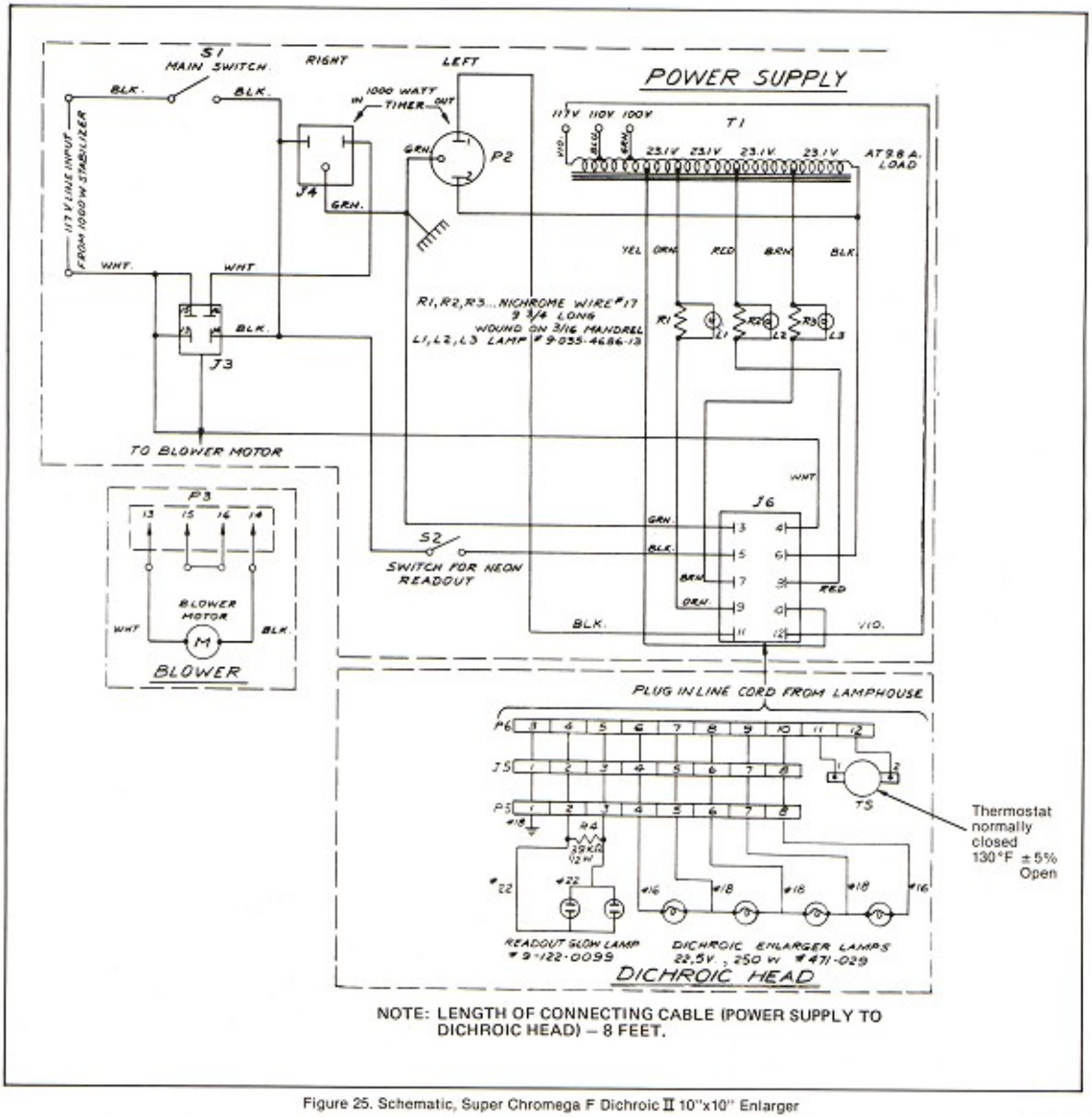

NOTE: LENGTH OF CONNECTING CABLE (POWER SUPPLY TO DICHROIC HEAD) – 8 FEET.

Figure 25. Schematic, Super Chromega F Dichroic II 10"x10" Enlarger

Specifications Subject to Change Without Notice

Omega Division
BERKEY MARKETING COMPANIES
25-20 Brooklyn-Queens Expwy. West, Woodside, NY 11377-7893 • (718) 932-4040

9-183-0240 Issue 6
827OM1186

Printed in U.S.A.